CUE®

Cue with a deadbolt locking mechanism operates in shared or assigned use functionality to secure day-use or private-use lockers.

NEXT® LOCK by Digilock®

RFID

- RFID operation
- Standard body style
- 1/2" (12 mm) motorized deadbolt locking mechanism
- Electronic key management
- Dual functionality - shared and assigned
- Metal housing with integrated pull handle
- Brushed nickel finish
- Surface mount
- Designed for new or retrofit installations
- Non-handed
- Adapts to multiple door thickness
- Visual & audible indicators
- Compatible RFID standards:
  ISO 14443A
  ISO 14443B
  ISO 15693

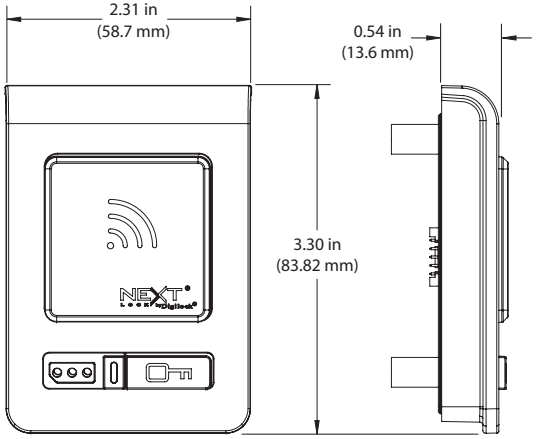

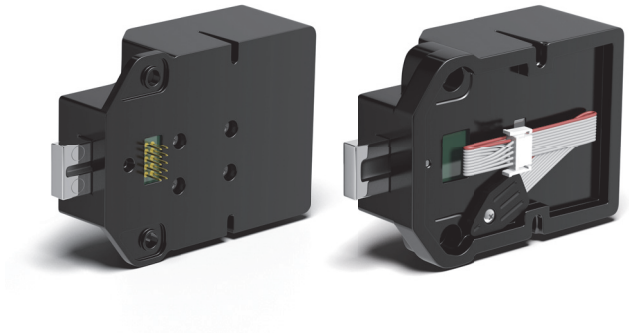

Features

- IP55 rated for moisture and dust protection
- Patented snap-lock cable or pin connector
- Powered by 4 premium AA batteries
- 3-5 year battery life
- Up to 5 year warranty

707 766 6000 | sales@digilock.com | **www.digilock.com**

RFID Front & Rear Units

Top View

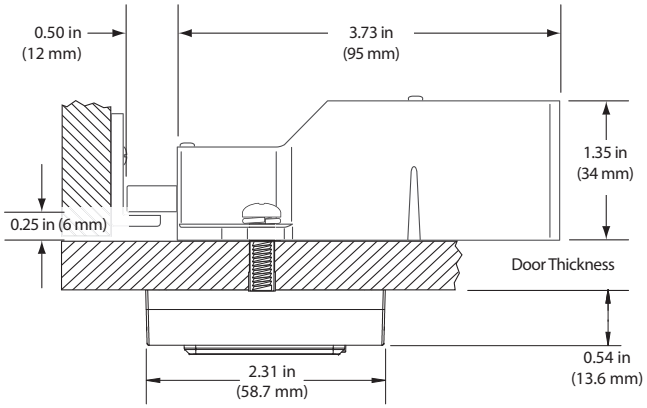

Shown with a pin-connected rear unit.

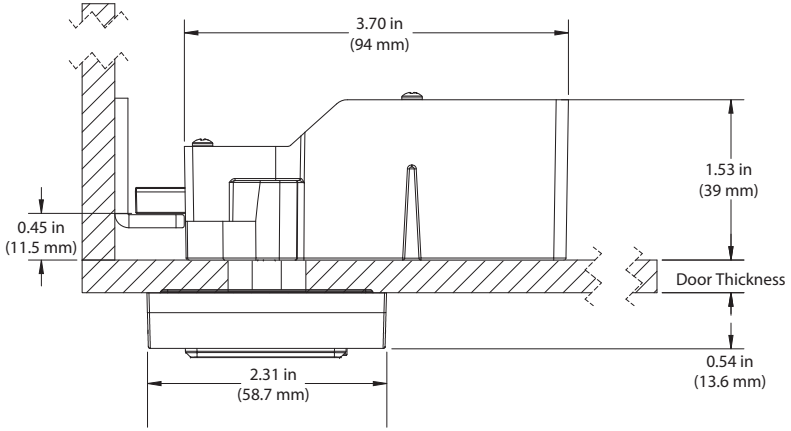

Shown with a cable-connected rear unit.

Side View

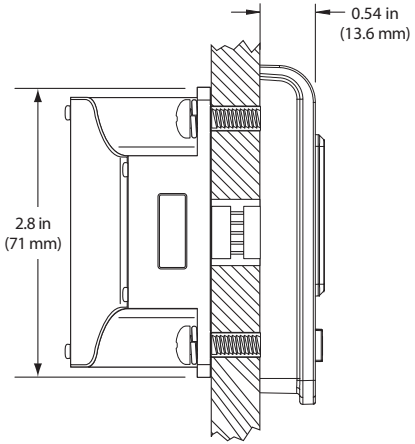

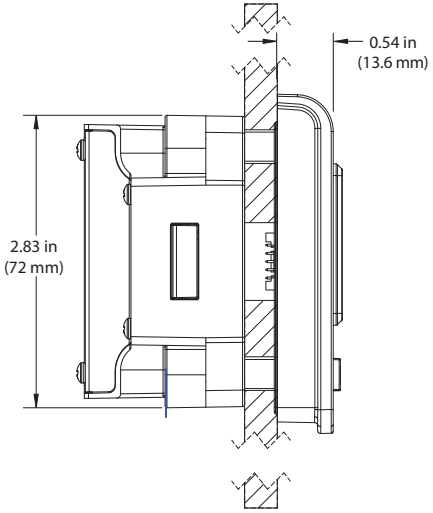

Front View

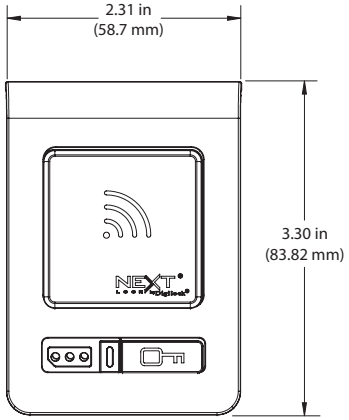

Standard Keypad locks with a pull handle and operated with a User Key are fully compliant with the Americans with Disabilities Act (ADA) guidelines set by the U.S. Access Board.